X2L-06-411

DC COUPLED SMA DOUBLE BALANCED MIXER

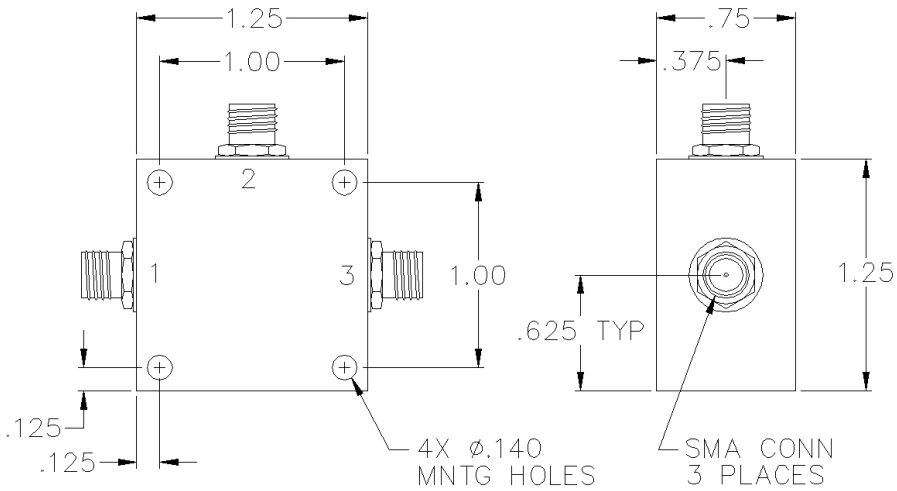

SPECIFICATIONS

Name:	X2L-06-411
Frequency Range:	
LO/RF:	1-1000 MHz
IF:	DC-1000 MHz
LO Drive:	+7 dBm
Conversion Loss:	8.0 dB max.
1 dB Compression Point:	+1 dBm typ.
Isolation:	
L/R:	25 dB min.
L/I:	20 dB min.
Connector Type:	SMA

IF polarity is negative for DC coupled mixers.

PORT CONFIGURATION

RF:	1
LO:	3
IF:	2
Ground:	Housing

This is a commercial off the shelf (COTS) product.
For an equivalent product that meets DFARS materials compliance, contact sales.
All specifications are subject to change without notice at any time. Rev: 220628

PULSAR
MICROWAVE CORPORATION

www.pulsarmicrowave.com · 48 Industrial St West, Clifton NJ 07012 · Tel: 973-779-6262 · Fax: 973-779-2727 · sales@pulsarmicrowave.com