X1V-01-411

AC COUPLED SMA TRIPLE BALANCED MIXER

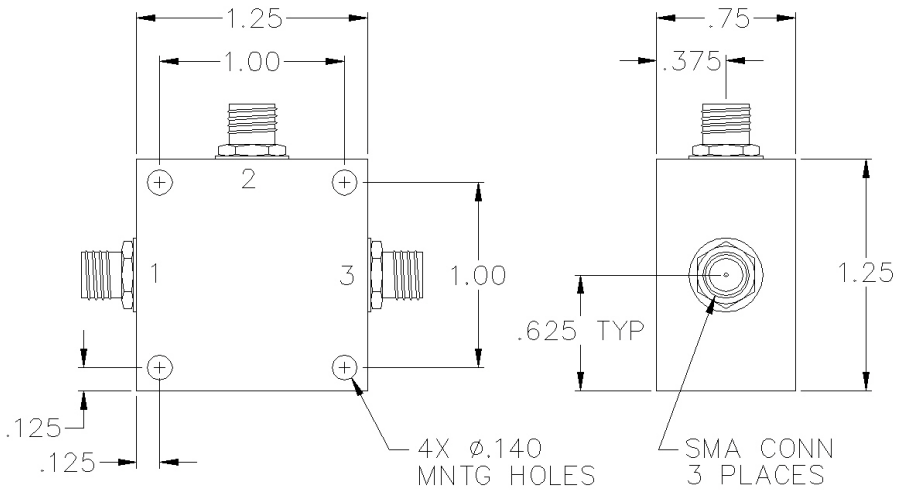

SPECIFICATIONS

Name:	X1V-01-411
Frequency Range:	
LO/RF:	0.05-250 MHz
IF:	0.05-250 MHz
LO Drive:	+27 dBm
Conversion Loss:	7.0 dB max.
1 dB Compression Point:	+20 dBm typ.
Isolation:	
L/R:	40 dB min.
L/I:	30 dB min.
Connector Type:	SMA

SMA female connectors standard, also available with BNC, TNC, F, and N connectors.

PORT CONFIGURATION

RF:	1
LO:	3
IF:	2
Ground:	Housing

This is a commercial off the shelf (COTS) product.
For an equivalent product that meets DFARS materials compliance, contact sales.
All specifications are subject to change without notice at any time. Rev: 220628

PULSAR MICROWAVE CORPORATION

www.pulsarmicrowave.com · 48 Industrial St West, Clifton NJ 07012 · Tel: 973-779-6262 · Fax: 973-779-2727 · sales@pulsarmicrowave.com