ST-23-411

SMA ANALOG PHASE SHIFTER

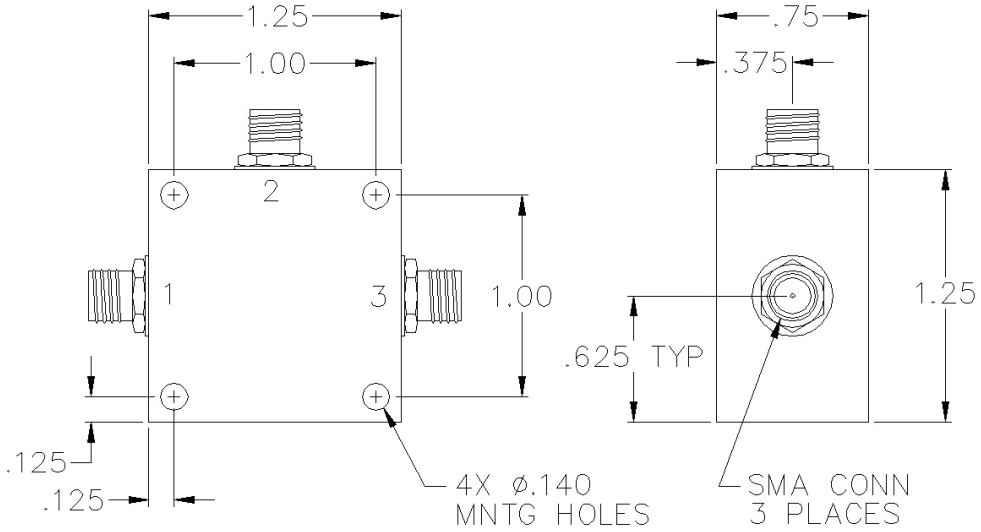

SPECIFICATIONS

Name:	ST-23-411
Frequency Range:	1800-2200 MHz
Insertion Loss:	2.8 dB max.
Phase Shift:	180° min.
Control Voltage:	0-15 Volts
VSWR:	1.70:1 max.
Package Type:	SMA

Maximum input power is +5 dBm.
Other frequencies, phase shift ranges, and control voltages available.

PORT CONFIGURATION

Input:	1
Output:	3
Control:	2
Ground:	Housing

This is a commercial off the shelf (COTS) product.
For an equivalent product that meets DFARS materials compliance, contact sales.
All specifications are subject to change without notice at any time. Rev: 220628

PULSAR MICROWAVE CORPORATION

www.pulsarmicrowave.com · 48 Industrial St West, Clifton NJ 07012 · Tel: 973-779-6262 · Fax: 973-779-2727 · sales@pulsarmicrowave.com