IM-06-412

SINGLE SIDEBAND IQ MODULATOR

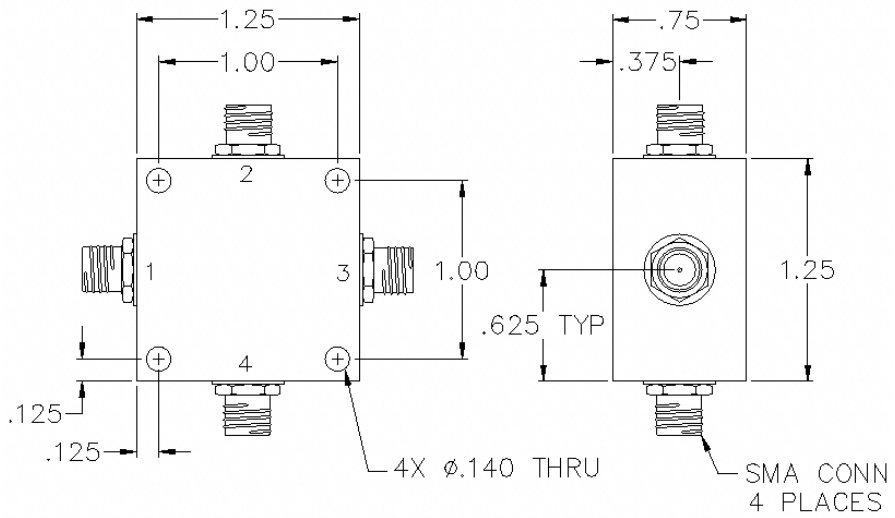

SPECIFICATIONS

Name:	IM-06-412
Carrier Frequency (+10 dBm):	95-105 MHz
Modulation Frequency (-10 dBm):	DC-50 MHz
Carrier Power:	+10 dBm nom.
Conversion Loss:	7.5 dB max.
Compression Point:	0 dBm min.
Sideband Rejection:	30 dBc min.
Carrier Rejection:	30 dBc min.
Connector Type:	SMA

PORT CONFIGURATION

Carrier:	1
Mod. I:	2
Mod. Q:	4
RF Out:	3
Ground:	Housing

SMA female connectors standard, also available with BNC, TNC, F, and N connectors.
Single Sideband Modulators do not include baseband quadrature hybrids.
Lower Sideband is suppressed when modulation frequency Q is +90° relative to modulation frequency I.

This is a commercial off the shelf (COTS) product.
For an equivalent product that meets DFARS materials compliance, contact sales.
All specifications are subject to change without notice at any time. Rev: 220628

PULSAR MICROWAVE CORPORATION

www.pulsarmicrowave.com · 48 Industrial St West, Clifton NJ 07012 · Tel: 973-779-6262 · Fax: 973-779-2727 · sales@pulsarmicrowave.com