CS10-02-436/1

10 DB SMA DIRECTIONAL COUPLER

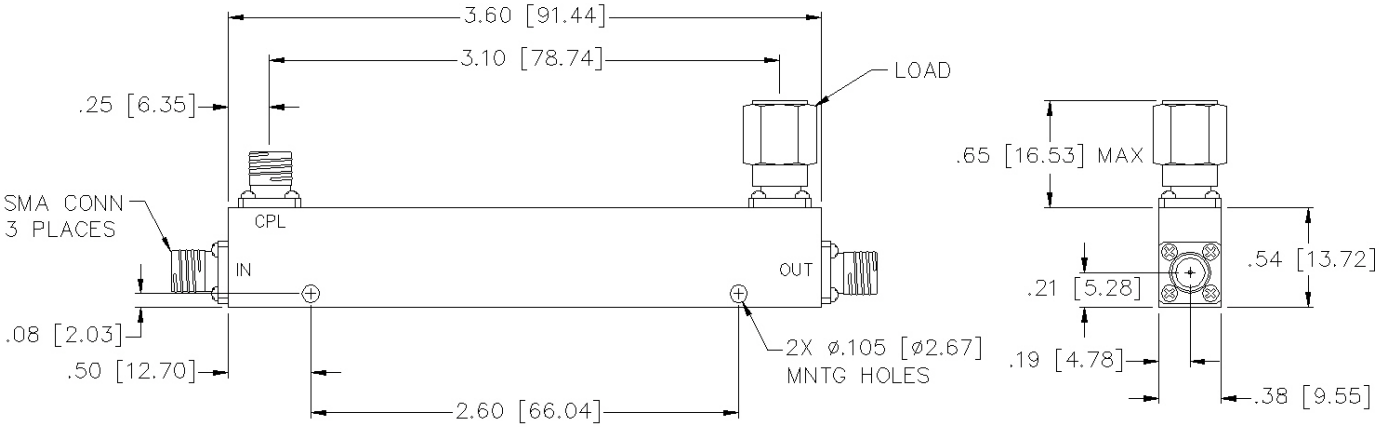

SPECIFICATIONS

Name:	CS10-02-436/1
Frequency Range:	0.5-2 GHz
Coupling:	10.0 ± 1.00 dB
Coupling Flatness:	±0.75 dB max.
Insertion Loss:	0.35 dB max.
Directivity:	23 dB min.
VSWR:	1.20:1 max.
Input Power:	50 watts max.
Reflected Power:	10 watts max.
Connector Type:	SMA

Insertion loss does not include coupling loss.
Input power is specified for load VSWR better than 1.20:1.

This is a commercial off the shelf (COTS) product.
For an equivalent product that meets DFARS materials compliance, contact sales.
All specifications are subject to change without notice at any time. Rev: 170130

PULSAR MICROWAVE CORPORATION

www.pulsarmicrowave.com · 48 Industrial St West, Clifton NJ 07012 · Tel: 973-779-6262 · Fax: 973-779-2727 · sales@pulsarmicrowave.com