RP2-04-418N

2-WAY TYPE N RESISTIVE POWER DIVIDER

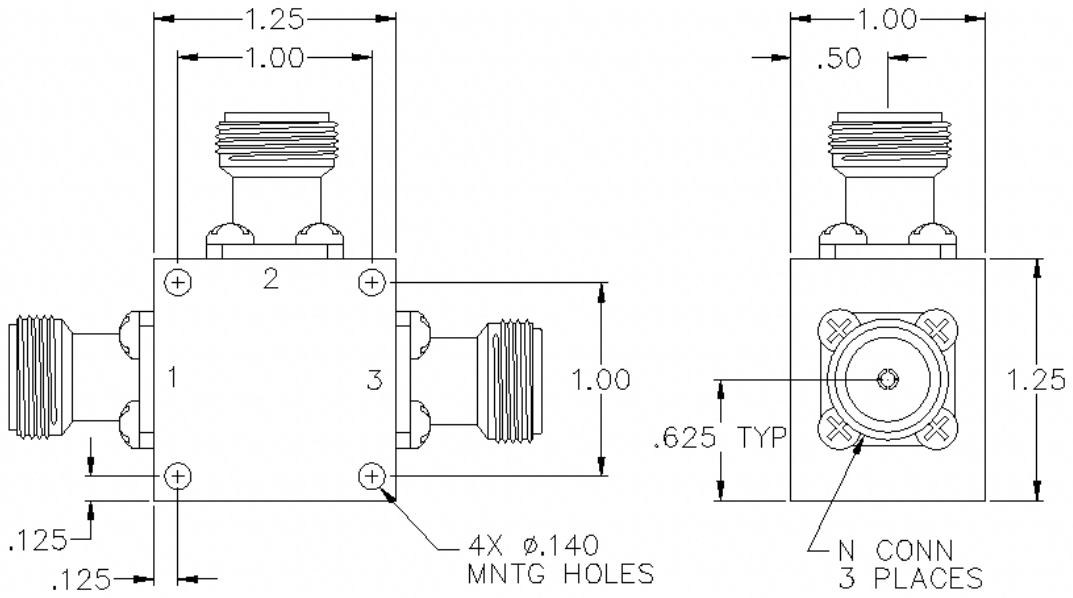

SPECIFICATIONS

Name:	RP2-04-418N
Frequency Range:	DC-18 GHz
Insertion Loss:	1.5 dB max.
Amplitude Balance:	0.5 dB max.
Phase Balance:	8° max.
VSWR:	1.50:1 max.
Input Power:	0.5 watts max.
Connector Type:	N

Insertion Loss does not include 6 dB theoretical loss.

PORT CONFIGURATION

Input:	1
Outputs:	2, 3

This is a commercial off the shelf (COTS) product.
For an equivalent product that meets DFARS materials compliance, contact sales.
All specifications are subject to change without notice at any time. Rev: 220616

PULSAR MICROWAVE CORPORATION

www.pulsarmicrowave.com · 48 Industrial St West, Clifton NJ 07012 · Tel: 973-779-6262 · Fax: 973-779-2727 · sales@pulsarmicrowave.com